California Faucets®

Arpeggio™

SINGLE HOLE MONOBLOCK BIDET SET

E404 MONO

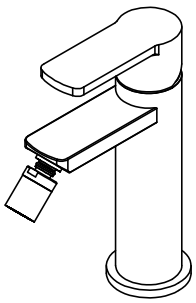

Features

- *3-7/8" spout center to center*
- *Ceramic mixing cartridge*
- *Flexible braided hoses for ease of installation*
- *∅ 1-1/4" all brass touch style pop up drain assembly*
- *Solid brass construction*
- *Over 30 finishes including 15 PVD finishes*

Codes/Standards Applicable

Meets or exceeds the following at date of manufacture:

- *ASME A112.18.1/CSA B125.1*
- *ADA compliant*

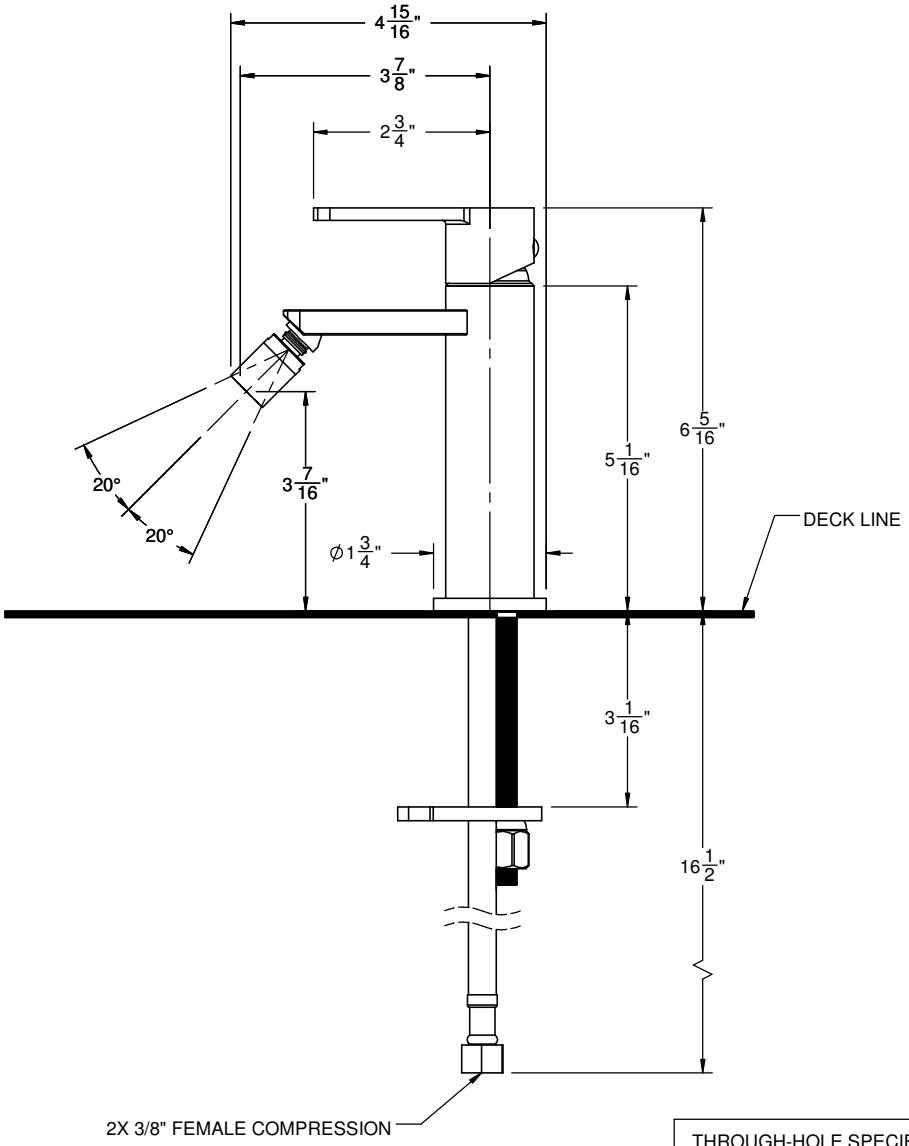

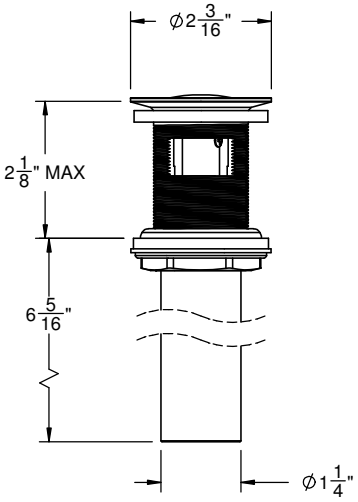

THROUGH-HOLE SPECIFICATIONS

	MIN	RECOMMENDED
SPOUT:	Ø1-1/4"	Ø1-3/8"
DRAIN:	Ø1-1/2"	Ø1-3/4"

SPECFICIATIONS SUBJECT TO CHANGE WITHOUT NOTICE

ALL DIMENSIONS SHOWN TO NEAREST 1/16"