INDUSTRIAL PLP PULLDOWN FAUCET / ANGLED SPOUT / 2PC. SUITE

9810-2

- **Max Counter Thickness 2-3/8”**
- **Minimum Install Hole Size 1-1/2"**

A. Spray Connection with 3/8″ Compression Fitting

B. Supply Hoses - 20″ Long with 3/8″ Compression Fittings

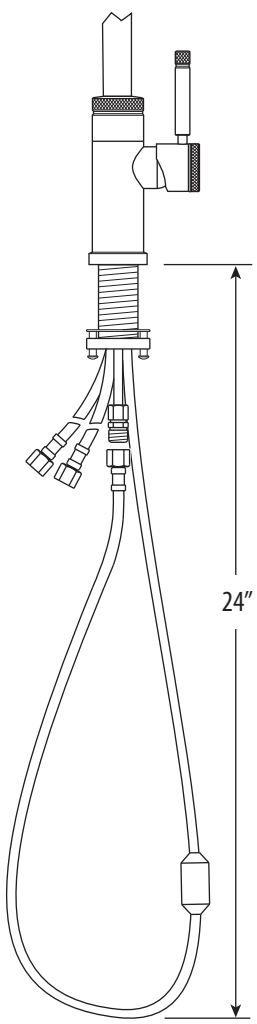

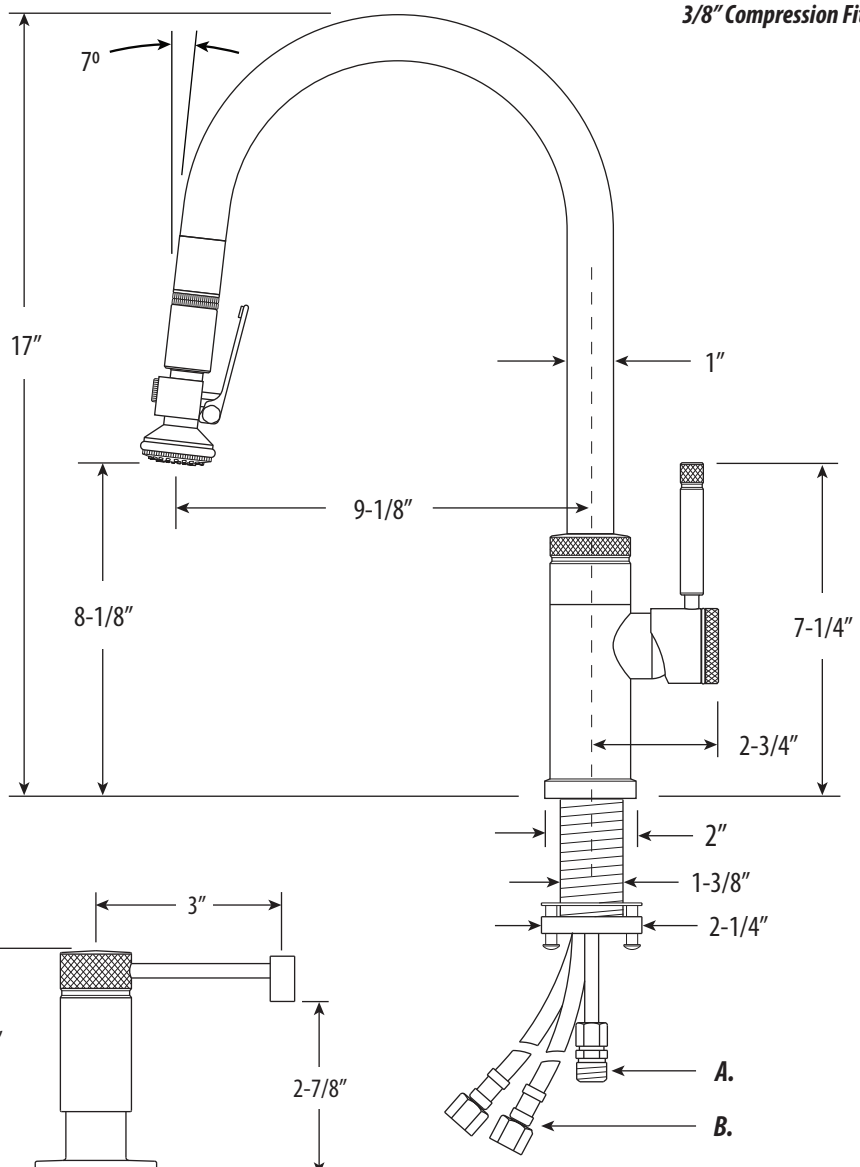

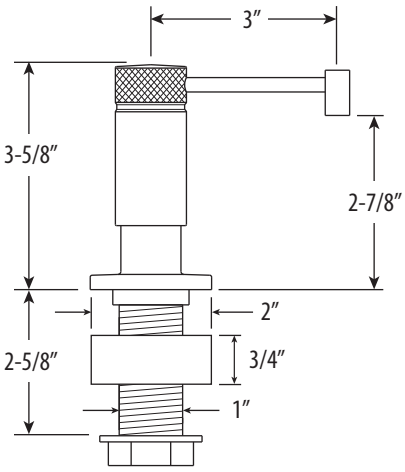

ECO BRASS®
HIGH PERFORMANCE LEAD FREE BRASS

DIMENSIONS MAY VARY AND ARE SUBJECT TO CHANGE. NO RESPONSIBILITY IS ASSUMED FOR USE OF SUPERCEDED OR VOIDED DATA